65TRTiG25 Assembly

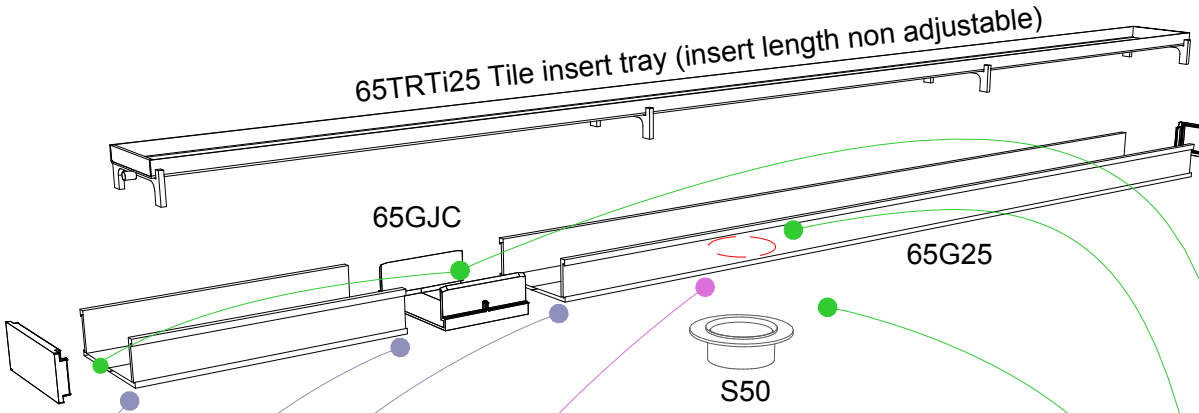

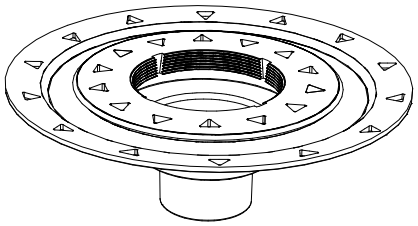

ALCF flange supplied separately.

Use a holesaw to cut the hole for the spigot. Hole sizes are per below:
51mm holesaw for S50 spigot to 50mm DWV pipe
37mm holesaw for S40 spigot to 40mm DWV pipe

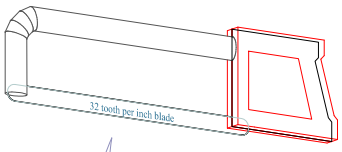

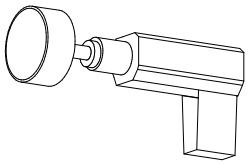

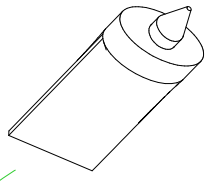

Use a hacksaw with 32TPI blade to cut PVC channel to size. .

PVC solvent cement the parts together. Use type N clear with clear primer.

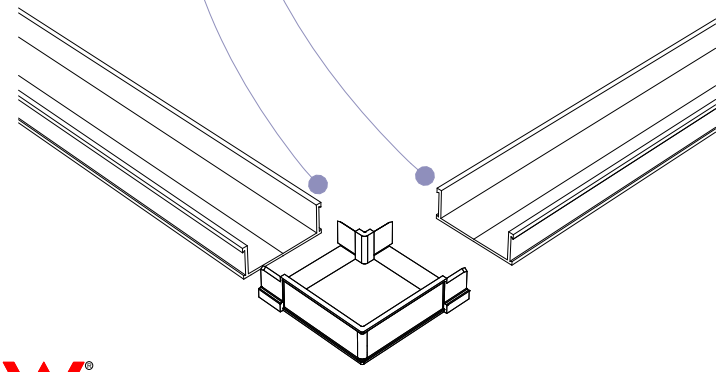

65GAM

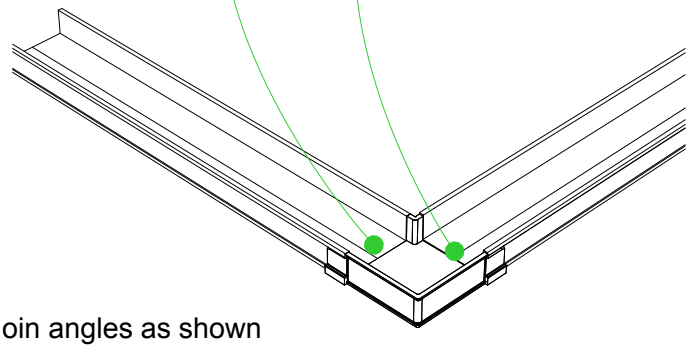

Join angles as shown if turning channel around a 90 degree corner.

WaterMark
Level 2 Licence WMKT 21249

Copyright 1989-2015 Stormtech Pty Ltd

This drawing is the intellectual property of STORMTECH Pty Ltd.

Drawings are not to scale. Use dimensions shown.

Patent number: 733361

e info@stormtech.com.au, w www.stormtech.com.au